CORSAIR™ CS 401A

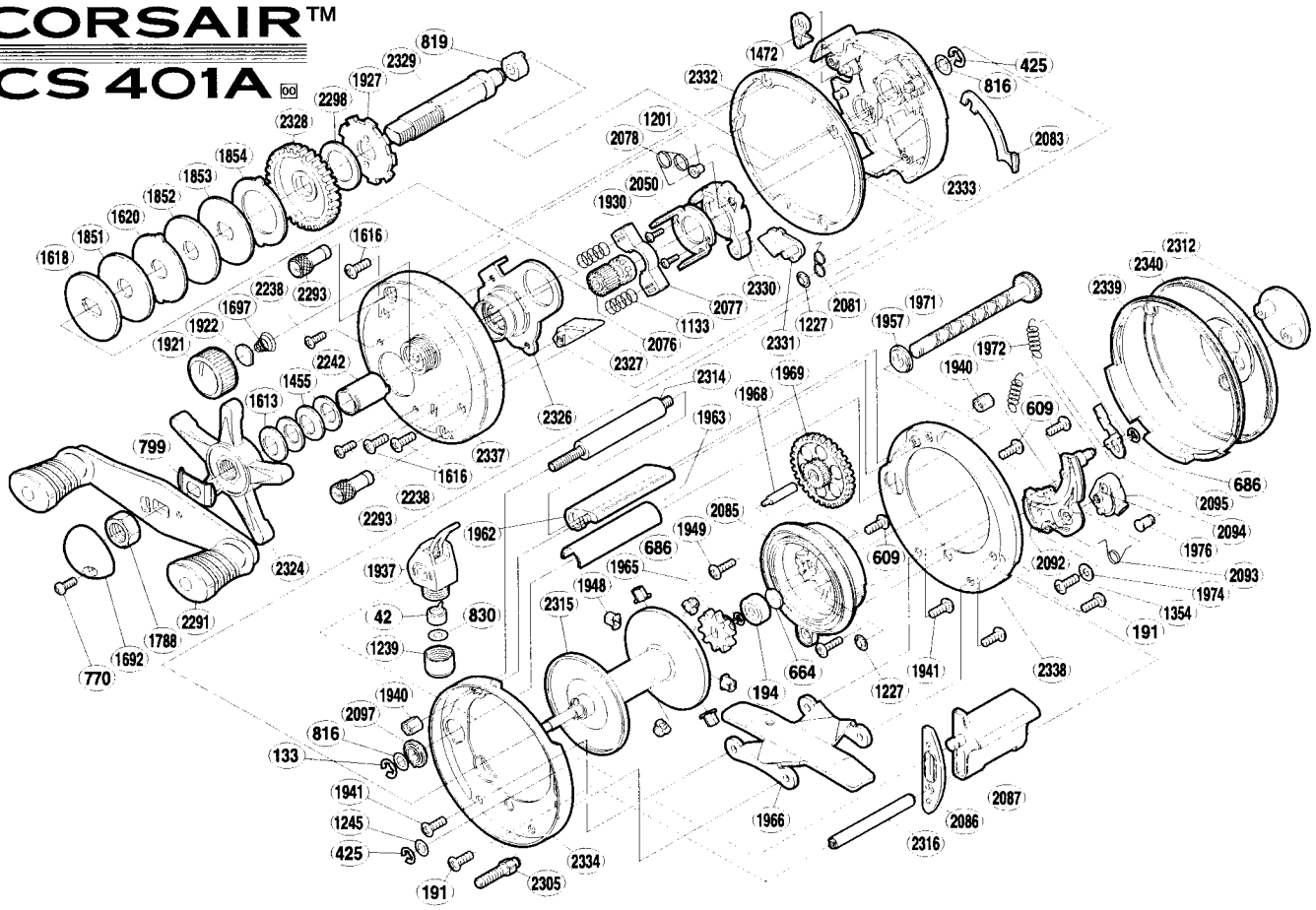

Part No.	Description
BNT0042	Line Guide Pawl
BNT0133	iEî Lock
BNT0191	Clutch Bar Support Screw
BNT0194	Ball Bearing
BNT0425	iEî Lock
BNT0609	Multi-Purpose Screw
BNT0664	Spacer B
BNT0686	iEî Lock
BNT0770	Handle Nut Plate Screw
BNT0799	Friction Washer
BNT0816	Shaft Washer
BNT0819	Drive Shaft Bushing
BNT0830	Spacer (optional)
BNT1133	Yoke Spring
BNT1201	Retractor Spring Collar
BNT1227	Push Nut (SPN-2)
BNT1239	Pawl Cap
BNT1245	Clutch Bar Support Spacer
BNT1354	Click Switch Screw
BNT1455	Drag Spring Washer (H)
BNT1472	Anti-Reverse Pawl
BNT1613	Drag Spring Washer (L)
BNT1616	Left Side Plate Screw
BNT1618	Key Washer (C)
BNT1620	Eared Washer
BNT1692	Handle Nut Plate
BNT1697	Spool Tension Spring
BNT1788	Handle Nut
BNT1851	Drag Washer (C)
BNT1852	Drag Washer (B-2)

Part No.	Description
BNT1853	Key Washer (A)
BNT1854	Eared Washer (B-1)
BNT1921	Cast Control Cap
BNT1922	Cast Control Spacer
BNT1927	Anti-Reverse Ratchet
BNT1930	Clutch Cam Screw
BNT1937	Line Guide Assembly
BNT1940	Frame Nut
BNT1941	Stand Screw
BNT1948	Brake Collar
BNT1949	Right Side Plate Screw
BNT1957	Worm Bushing (B)
BNT1962	Thumb Rest
BNT1963	Level Wind Guard
BNT1965	Idle Gear (A)
BNT1966	Stand
BNT1968	Idle Gear (B) Shaft
BNT1969	Idle Gear (B)
BNT1971	Worm Shaft
BNT1972	Click Spring
BNT1974	Click Switch Washer
BNT1976	Click Shaft
BNT2050	Clutch Cam Retainer
BNT2076	Pinion Gear
BNT2077	Yoke
BNT2078	Retractor Spring
BNT2081	Clutch Pawl Spring
BNT2083	Clutch Plate
BNT2085	Brake Case
BNT2086	Clutch Bar Guide

Part No.	Description
BNT2087	Quick-Fire II Clutch Bar
BNT2092	Click Plate
BNT2093	Click Switch Spring
BNT2094	Click Switch
BNT2095	Click Pawl
BNT2097	Worm Bushing (A)
BNT2238	Bush Plate Screw
BNT2242	Roller Clutch Inner Tube
BNT2291	Handle Assembly
BNT2293	Left Side Plate Nut
BNT2298	Drive Shaft Washer (B)
BNT2305	Stand Bolt
BNT2312	Right Side I.D. Plate
BNT2314	Frame Bar
BNT2315	Spool Assembly
BNT2316	Clutch Bar Support
BNT2324	Star Drag
BNT2326	Roller Clutch Assembly
BNT2327	Return Pin Guide
BNT2328	Drive Gear
BNT2329	Drive Shaft
BNT2330	Clutch Cam
BNT2331	Clutch Pawl
BNT2332	A-Side Seal
BNT2333	Set Plate
BNT2334	Left Side Frame
BNT2337	Left Side Plate
BNT2338	Right Side Frame
BNT2339	B-Side Seal
BNT2340	Right Side Plate