SHIMAN

1997 Repair Supplen

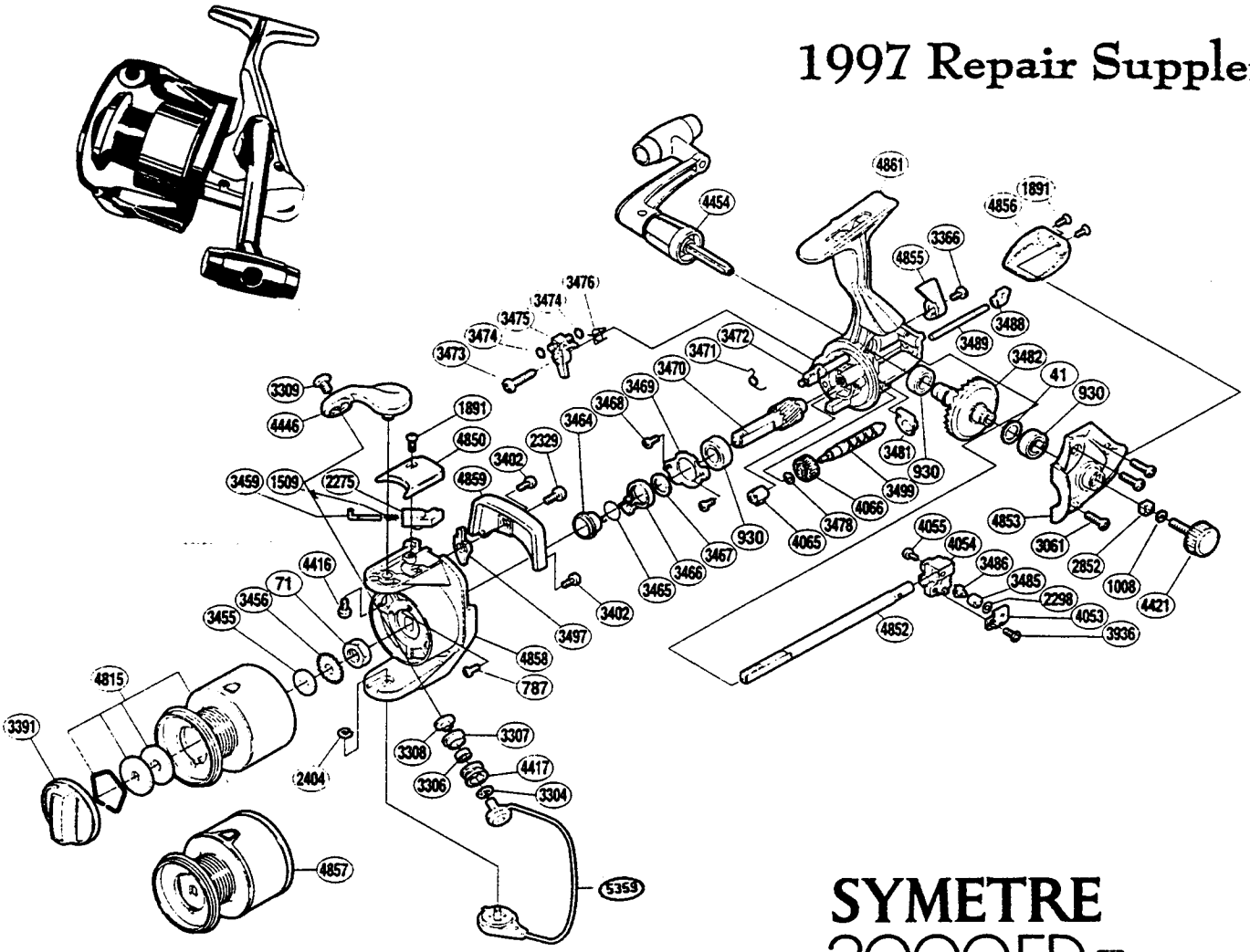

SYMETRE 2000FD 97

SY2000FD

Part #	Description	Part #	Description	Part #	Description
RD 0041	Drive Gear Washer	RD 3459	Bail Spring Guide (A)	RD 3936	Oscillating Pawl Cover Screw
RD 0071	Rotor Nut	RD 3464	Lock Out Spring Holder	RD 4053	Oscillating Pawl Cover
RD 0787	Nut Lock Screw	RD 3465	Anti-Reverse Lock Out Spring	RD 4054	Oscillating Slider
RD 0930	Ball Bearing	RD 3466	Anti-Reverse Lock Out	RD 4055	Slider Retainer Screw
RD 1008	Handle Lock Washer	RD 3467	Bushing Washer	RD 4065	Worm Bearing
RD 1509	Bail Spring	RD 3468	Bearing Retainer Screw	RD 4066	Idle Gear
RD 1891	Multi-Purpose Screw	RD 3469	Bearing Retainer	RD 4416	Bail Arm Screw
RD 2275	Bail Spring Guide (B)	RD 3470	Pinion Gear	RD 4417	Line Roller
RD 2298	Spacer	RD 3471	Anti-Reverse Cam Spring	RD 4421	Handle Screw Cap
RD 2329	Bail Trip Lever Screw	RD 3472	Anti-Reverse Cam	RD 4446	Bail Arm
RD 2404	"E" Lock	RD 3473	Anti-Reverse Pawl Screw	RD 4454	Handle Assembly
RD 2852	Handle Screw Lock	RD 3474	"O" Ring	RD 4815	Spool Assembly (Aluminum)
RD 3061	Side Cover Screw	RD 3475	Anti-Reverse Pawl	RD 4850	Bail Spring Cover
RD 3304	Bearing Spacer	RD 3476	Anti-Reverse Pawl Spring	RD 4852	Main Shaft
RD 3306	Line Roller Bearing	RD 3478	Worm Shaft Spacer	RD 4853	Side Cover
RD 3307	Line Roller Bushing	RD 3481	Bushing	RD 4855	Anti-Reverse Lever
RD 3308	Line Roller Washer	RD 3482	Drive Gear	RD 4856	Rear Protector
RD 3309	Line Roller Screw	RD 3485	Oscillating Slider Bushing	RD 4857	Spool Assembly (Graphite)
RD 3366	Anti-Reverse Lever Screw	RD 3486	Oscillating Pawl	RD 4858	Rotor
RD 3391	Drag Knob	RD 3488	Oscillating Guide Holder	RD 4859	Counterbalance Cover
RD 3402	Cover Screw	RD 3489	Oscillating Guide	RD 4861	Body
RD 3455	Spool Washer	RD 3497	Bail Trip Lever	RD 5359	Bail Assembly
RD 3456	Spool Support	RD 3499	Worm Shaft		