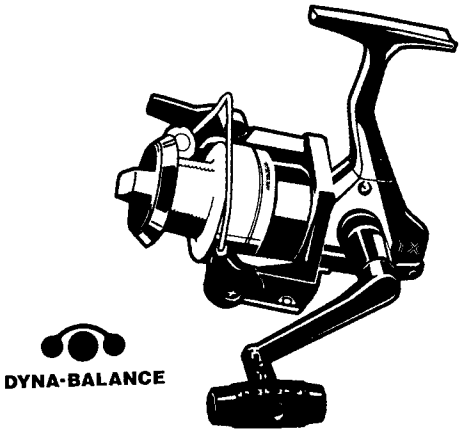

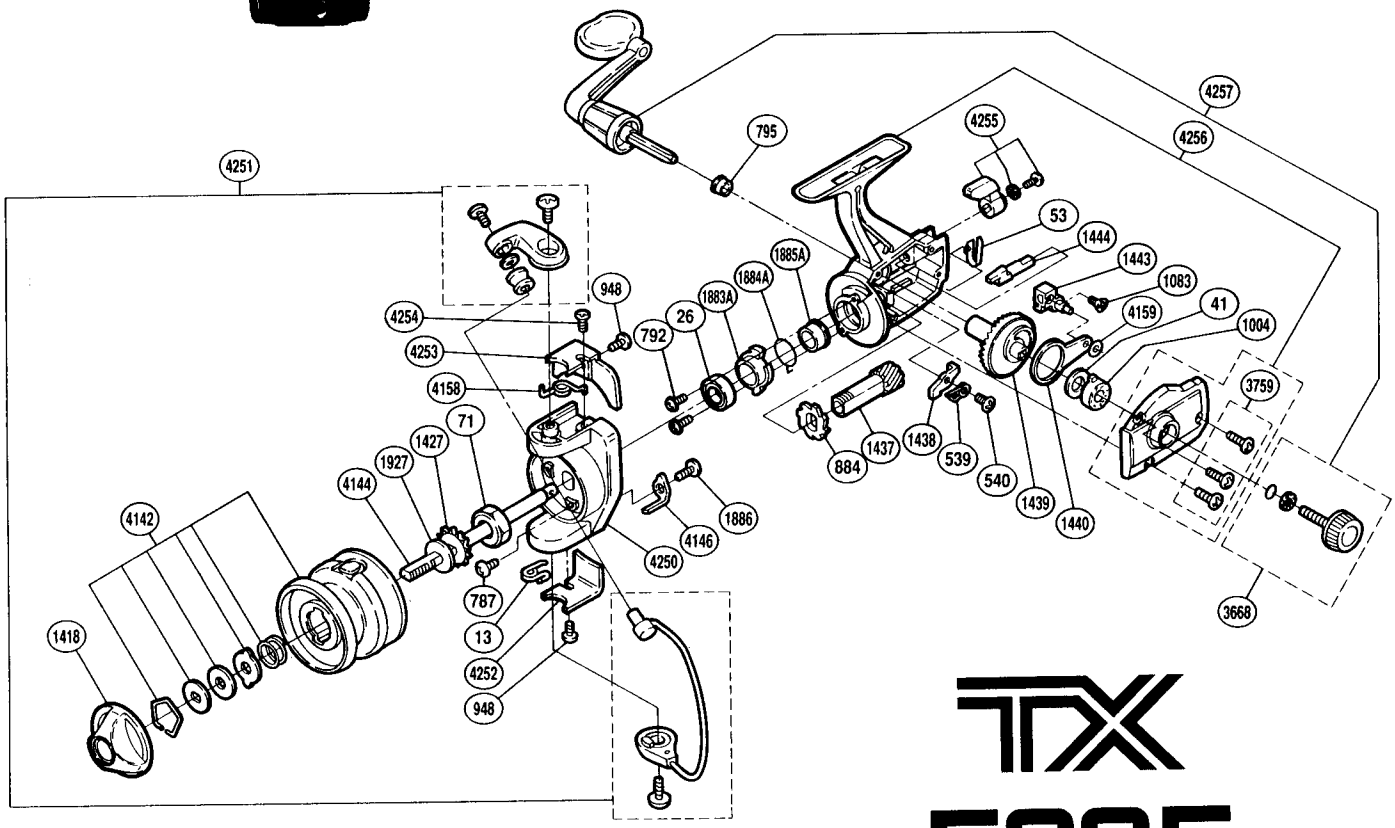

TX 500F 95

TX500F

Part #	Description	Part #	Description	Part #	Description
RD 0013	Lever Spring	RD 1418	Drag Knob	RD 3759	Side Cover Screws
RD 0026	Ball Bearing	RD 1427	Spool Support	RD 4142	Spool Assembly
RD 0041	Drive Gear Washer	RD 1437	Pinion Gear	RD 4144	Main Shaft
RD 0053	Anti-Reverse Cam Spring	RD 1438	Anti-Reverse Pawl	RD 4146	Bail Trip Lever
RD 0071	Rotor Nut	RD 1439	Drive Gear	RD 4158	Bail Spring
RD 0539	Anti-Reverse Pawl Spring	RD 1440	Oscillating Arm	RD 4159	Oscillating Spacer
RD 0540	Anti-Reverse Pawl Screw	RD 1443	Oscillating Block	RD 4250	Rotor
RD 0787	Nut Lock Screw	RD 1444	Anti-Reverse Cam	RD 4251	Bail Assembly
RD 0792	Bearing Retainer Screw	RD 1883A	Anti-Reverse Lock Out	RD 4252	Bail Trip Cover
RD 0795	Bushing B	RD 1884A	Anti-Reverse Lock Out Spring	RD 4253	Bail Spring Cover