SHIMANO®

STRADIC®

ST-5000FH

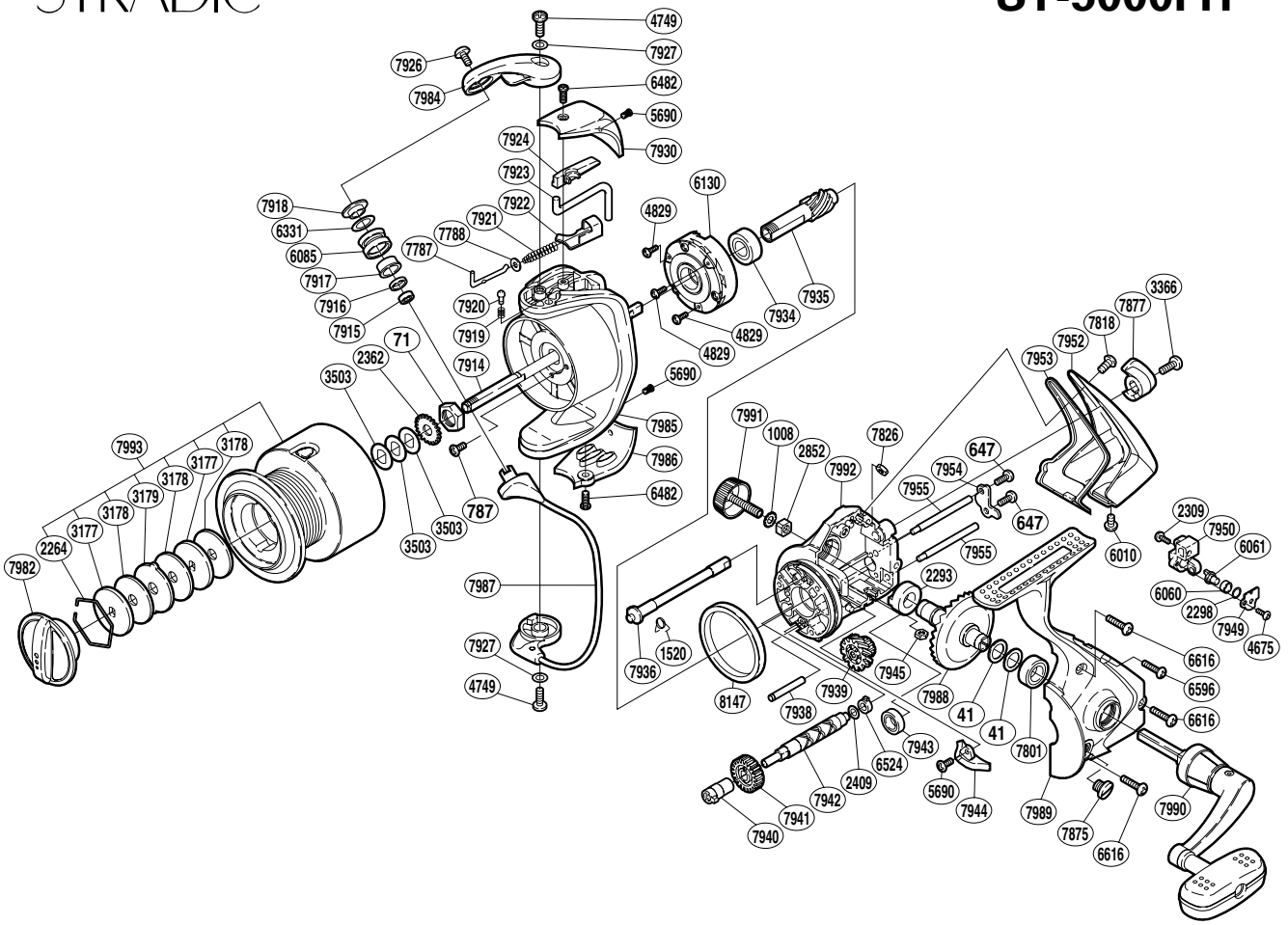

Part No.	Description	Part No.	Description	Part No.	Description
RD0041	Drive Gear Washer	RD6482	Protector Screw (A)	RD7938	Idle Gear (B) Shaft
RD0071	Rotor Nut	RD6524	Worm Bushing (rear)	RD7939	Idle Gear (B)
RD0647	Worm Shaft Retainer Screw	RD6596	Side Cover Screw (small)	RD7940	Worm Bushing (front)
RD0787	Nut Lock Screw	RD6616	Side Cover Screw (large)	RD7941	Idle Gear
RD1008	Handle Lock Washer	RD7787	Bail Spring Guide (A)	RD7942	Worm Shaft
RD1520	Anti-Reverse Cam Spring	RD7788	Spring Guide (A) Support	RD7943	Ball Bearing
RD2264	Drag Washers Retainer	RD7801	Ball Bearing	RD7944	Bail Trip Strike
RD2293	Drive Gear Bushing	RD7818	Rear Protector Screw (D)	RD7945	Rear Protector Nut (A)
RD2298	Spacer	RD7826	Rear Protector Nut (B)	RD7949	Oscillating Pawl Cover
RD2309	Slider Retainer Screw	RD7875	Oil Cap	RD7950	Oscillating Slider
RD2362	Spool Support	RD7877	Anti-Reverse Lever	RD7952	Rear Protector
RD2409	Worm Shaft Spacer	RD7914	Main Shaft	RD7953	Rear Shield
RD2852	Handle Screw Lock	RD7915	Ball Bearing	RD7954	Worm Shaft Retainer
RD3177	Key Washer	RD7916	Bearing Spacer	RD7955	Oscillating Guide
RD3178	Drag Washer	RD7917	Line Roller Bushing	RD7982	Drag Knob
RD3179	Eared Washer	RD7918	Line Roller Washer	RD7984	Bail Arm
RD3366	Anti-Reverse Lever Screw	RD7919	Click Spring	RD7985	Rotor
RD3503	Spool Washer	RD7920	Click Pin	RD7986	Bail Hold Support Guard
RD4675	Oscillating Pawl Cover Screw	RD7921	Bail Spring	RD7987	Bail Assembly
RD4749	Multi-Purpose Screw	RD7922	Bail Spring Seat	RD7988	Drive Gear
RD4829	Roller Clutch Screw	RD7923	Bail Trip Lever	RD7989	Side Cover
RD5690	Multi-Purpose Screw	RD7924	Bail Trip Cover	RD7990	Handle Assembly
RD6010	Rear Protector Screw (C)	RD7926	Line Roller Screw	RD7991	Handle Screw Cap
RD6060	Oscillating Slider Bushing	RD7927	Adjusting Washer	RD7992	Body
RD6061	Oscillating Pawl	RD7930	Bail Spring Cover	RD7993	Spool Assembly
RD6085	Line Roller	RD7934	Ball Bearing	RD8147	Friction Ring
RD6130	Roller Clutch Assembly	RD7935	Pinion Gear		
RD6331	Line Roller Spacer	RD7936	Anti-Reverse Cam		